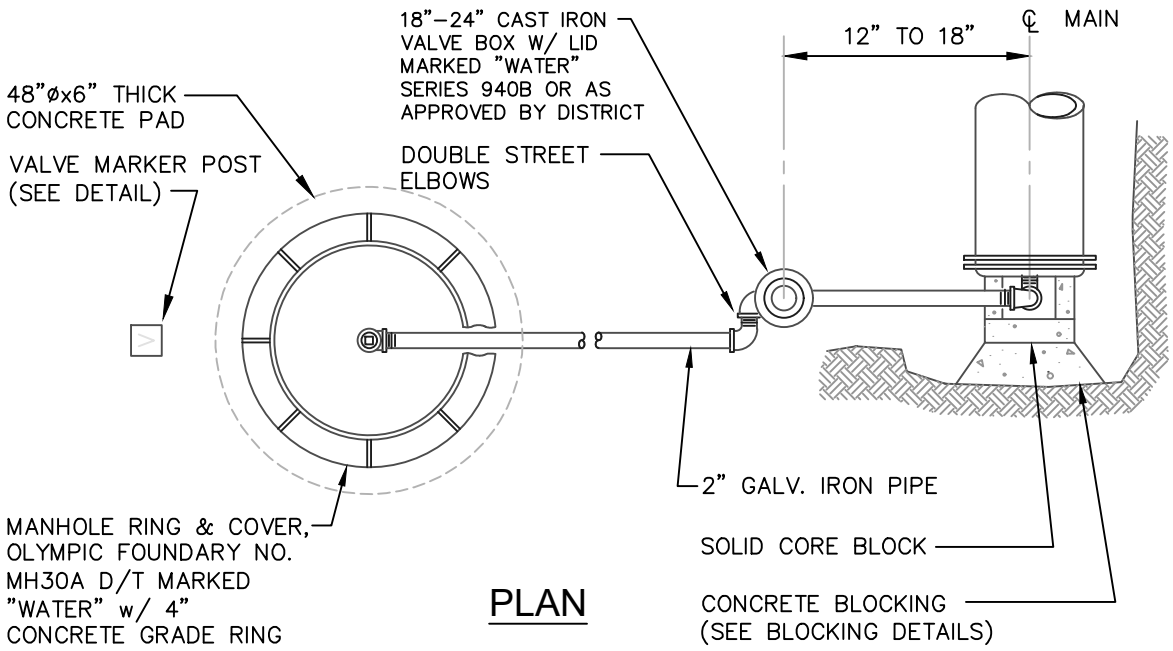

PLAN

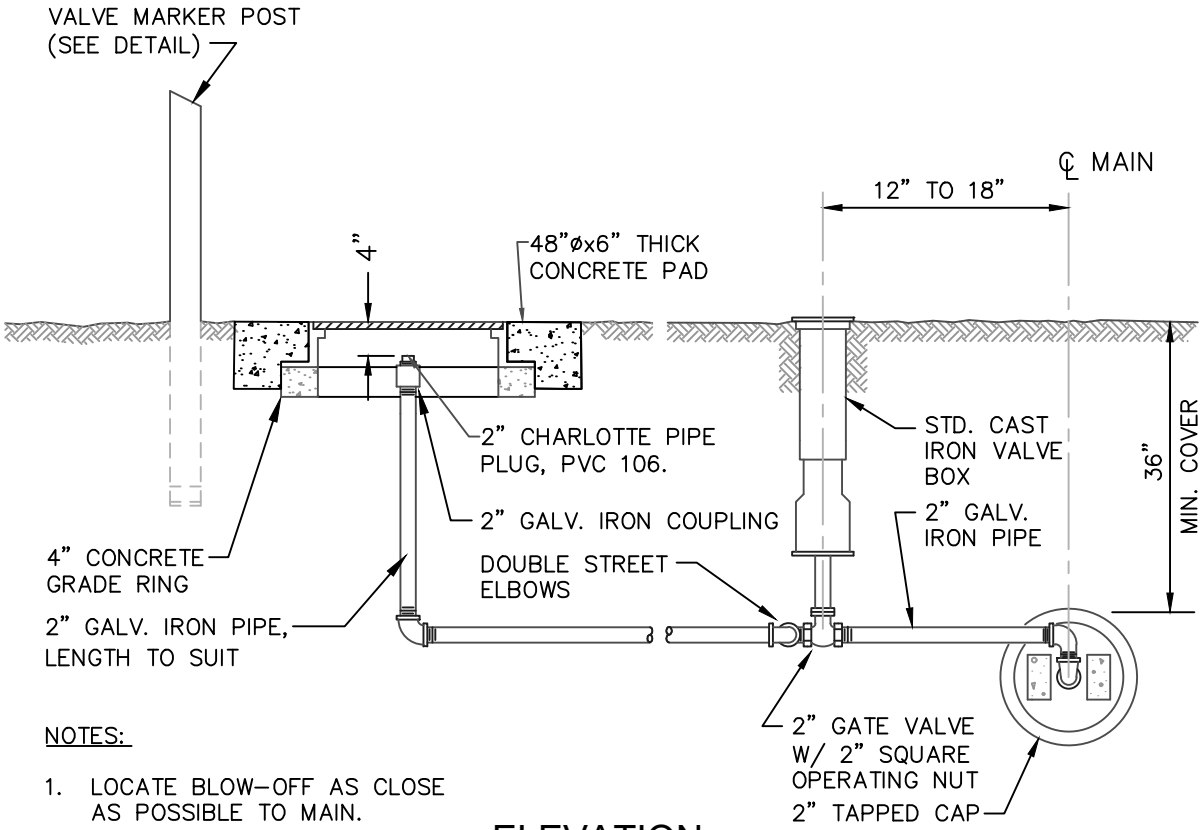

ELEVATION

NOTES:

1. LOCATE BLOW–OFF AS CLOSE AS POSSIBLE TO MAIN.
2. THE GROUND WITHIN 3' RADIUS OF BLOW–OFF SHALL BE GRADED UNIFORMLY.

SOOS CREEK WATER & SEWER DISTRICT

OFF PAVING 2" BLOWOFF ASSEMBLY

REVISION DATE	SCALE	DISTRICT APPROVAL	DATE APPROVED
NOVEMBER 1, 2022	NTS	Gregory G. Hill, P.E.	APRIL 27, 2023
FILE NAME W–9.DWG		DWG. NO.	W-9