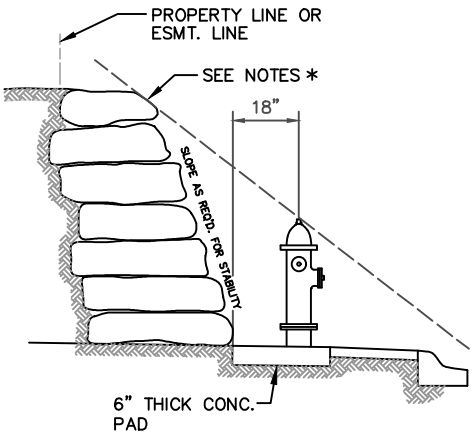

FIRE HYDRANT IN CUT

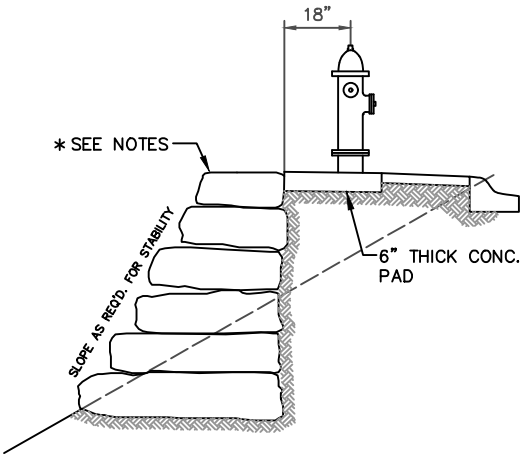

FIRE HYDRANT IN FILL

FIRE HYDRANT LOCATION IN CUT OR FILL

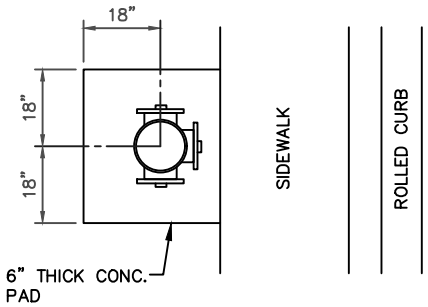

FIRE HYDRANT PLAN VIEW

HYDRANT RUN:

1. LENGTH ESTABLISHED ON JOB AS APPROVED BY DISTRICT.
   A. 6" DI PIPE WITH MECHANICAL JOINTS (MJ). ALL MJ SHALL BE RESTRAINED WITH MEGALUG OR APPROVED EQUAL.
   B. OR 6" DI PIPE, MJ WITH 2 3/4" STEEL TIE RODS WITH ONE HEAVY COAT OF COAL TAR PRESERVATIVE ON TIE RODS, NUTS AND BOLTS AFTER INSTALLATION.
   C. HYDRANT RUNS OVER 1-PIPE LENGTH SHALL USE FIELD LOK GASKETS OR APPROVED EQUAL.
   D. OR 6" DI PIPE, FLANGED (SHORT RUNS ONLY).

HYDRANT:

1. SHALL BE CLEANSED & PRIME COATED WITH HEAVY DUTY BRUSH TYPE PRIMER OR APPROVED EQUAL. ALL HYDRANTS SHALL BE PAINTED YELLOW. TWO TOP COATS SHALL BE OIL RESISTANT ENAMEL, BRUSH TYPE OR APPROVED EQUAL.
2. STENCIL ON FACE OF HYDRANT BARREL THE DISTANCE FROM HYDRANT TO GV. IN FEET WITH 2" BLACK LETTERS.
3. SURFACE TO BE GRADED UNIFORMLY AROUND HYDRANT (18" RADIUS). SLOPE AWAY W/ BRUSH FINISH.
4. INSTALL STIMSONITE MODEL 88-A BLUE REFLECTIVE PAVEMENT MARKER, OR EQUAL, ON HYDRANT SIDE OF THE CENTER LINE OF THE ADJACENT STREET IN DIRECT LINE WITH THE HYDRANT.
5. PUMPER CONNECTION SHALL BE EQUIPPED WITH A 5-INCH STORZ ADAPTER. REFER TO DESIGN AND CONSTRUCTION STANDARDS FOR DETAILS.

* NOTES:

1. ROCKERY TYPE RETAINING WALL TO BE PROVIDED WHERE NECESSARY IN CUT OR FILL AREAS.
2. NO GUARD POSTS.

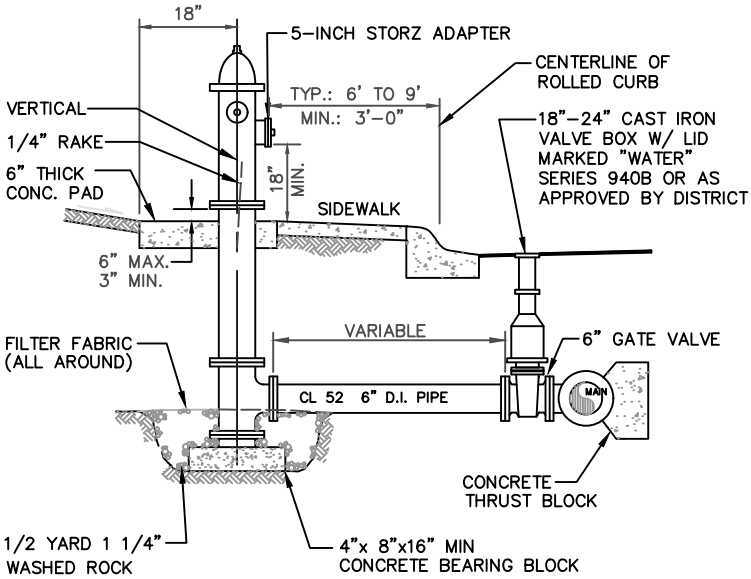

FIRE HYDRANT ASSEMBLY

SOOS CREEK WATER & SEWER DISTRICT

FIRE HYDRANT ASSEMBLY
ROLLED CURB

REVISION DATE	SCALE	DISTRICT APPROVAL	DATE APPROVED
DECEMBER 1, 2022	NTS	Gregory G. Hill, P.E.	APRIL 27, 2023
FILE NAME W-4.DWG		DWG. NO.	W-4